Pilot operated check valves type ADRL, AGRL, AGRLE

in-line mounting, port size from G 3/8” to G 1 1/4”
subplate mounting, ISO 5781 size 10, 20 and 32

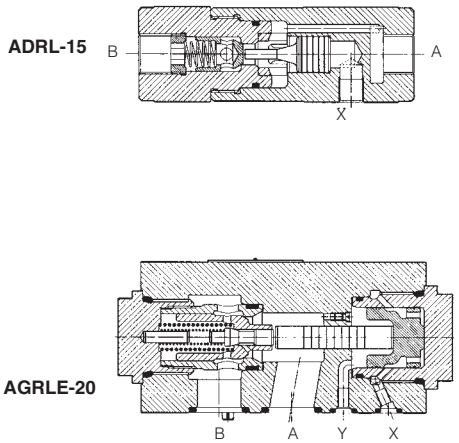

ADRL are pilot operated (port X) check valves for in-line mounting available with port size from 3/8" GAS to 1 1/4" GAS.
Flow up to 300 l/min.
Pressure up to 400 bar.

AGRL and AGRLE are pilot operated (port X) check valves for subplate mounting available with mounting surface ISO 5781 size 10, 20 and 32.
Flow up to 500 l/min.
Max pressure: 315 bar.

AGRLE versions have an external drain (port Y) of the pilot chamber to permit a correct use of pilot operated check valve in systems where valve must open in presence of pressure at port A: infact pressure at port A, on regular pilot operated check valves, may affect the check opening by acting against the pilot device.

Valves designed to operate in hydraulic systems with hydraulic mineral oil or synthetic fluid having similar lubricating characteristics.

1 MODEL CODE

AGRL E – 10 / ** /*

ADRL = pilot operated check valve in-line mounting
AGRL = pilot operated check valve subplate mounting

Only for AGRL:
- = without external drain
E = with external drain

Threaded connections for ADRL:
10 = G 3/8”
15 = G 1/2”
20 = G 3/4”
32 = G 1 1/4”

Size for AGRL and AGRLE:
10
20
32

Cracking pressure
for ADRL
- = 0,5 bar
/2 = 2 bar
/4 = 4 bar
/8 = 8 bar

for AGRL
- = 0,5 bar

Design number

Synthetic fluids:
WG = water-glycol
PE = phosphate ester

2 HYDRAULIC CHARACTERISTICS

Hydraulic symbols

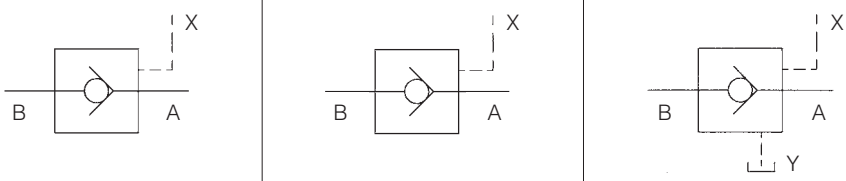

Model	ADRL-10	ADRL-15	ADRL-20	ADRL-32	AGRL-10	AGRL-20	AGRL-32	AGRLE-10	AGRLE-20	AGRLE-32
Piloting ratio (1)	2,8	2,7	2,5	2,3	13,6	14,0	14,4	13,6	14,0	14,4
Max recommended flow [l/min]	30	60	100	300	160	300	500	160	300	500
Max pressure [bar]	400	350			315					

(1) Applying the pilot pressure through the pilot port X, the pilot spool opens the check valve, allowing free flow B→A.
The minimum pilot pressure for correct operation depends on the pilot ratio indicated in the table and on the pressure closing the check. i.e.: the pilot pressure for ADRL-20 is the pressure on the check divided by 2,5. The valves AGRL-* and AGRLE-*, are equipped with a decompression system.

3 MAIN CHARACTERISTICS OF PILOT CHECK VALVES TYPE ADRL, AGRL, AGRLE

Installation position	Any position. For AGRLE valves, the drain port Y has to be connected directly to the tank without counter pressure
Subplate surface finishing (for AGRL and AGRLE)	Roughness index $\sqrt{0.4}$, flatness ratio 0,01/100 (ISO 1101)
Ambient temperature	from -20°C to + 70°
Fluid	Hydraulic oil as per DIN 51524...535, for other fluids see section 1
Recommended viscosity	15 ÷100 mm²/s at 40°C (ISO VG 15 ÷ 100)
Fluid contamination class	ISO 19/16, achieved with in line filters at 25 μm value and $\beta_{25} \geq 75$ (recommended)
Fluid temperature	-20°C +60°C (standard and /WG seals) -20°C +80°C (/PE seals)

4 FLOW VERSUS PRESSURE DROP DIAGRAMS FOR ADRL based on mineral oil ISO VG 46 at 50°C

1 = **ADRL-10** B→A
2 = **ADRL-10** A→B
3 = **ADRL-15** B→A
4 = **ADRL-15** A→B
5 = **ADRL-20** B→A
6 = **ADRL-20** A→B
7 = **ADRL-32** B→A
8 = **ADRL-32** A→B

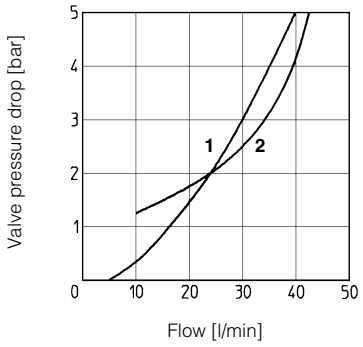

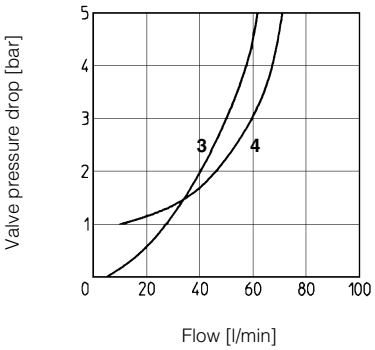

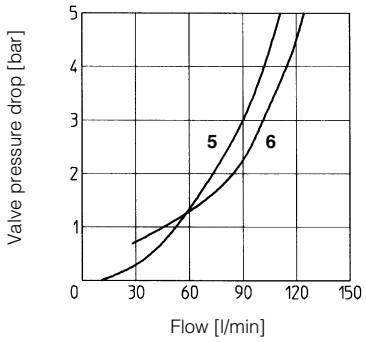

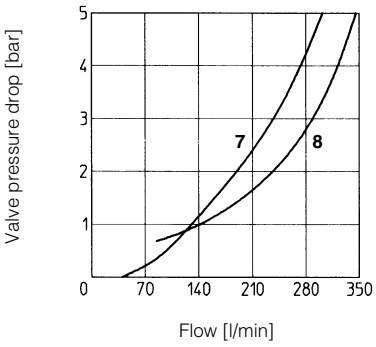

5 FLOW VERSUS PRESSURE DROP DIAGRAMS FOR AGRL AND AGRLE based on mineral oil ISO VG 46 at 50°C

1 = **AGRL-10, AGRLE-10** B→A
2 = **AGRL-10, AGRLE-10** A→B
3 = **AGRL-20, AGRLE-20** B→A
4 = **AGRL-20, AGRLE-20** A→B
5 = **AGRL-32, AGRLE-32** B→A
6 = **AGRL-32, AGRLE-32** A→B

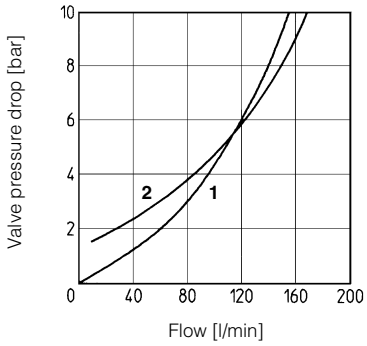

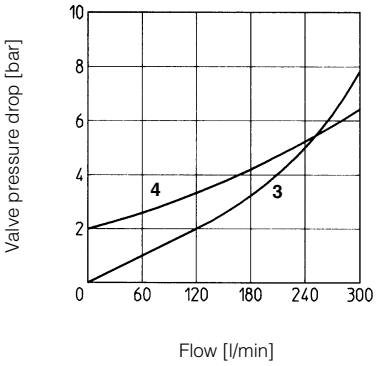

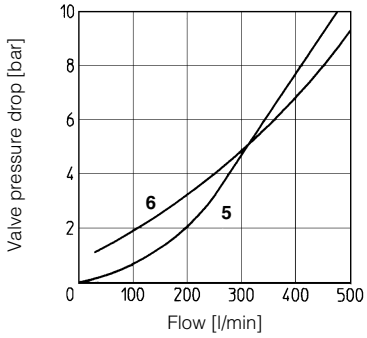

6 DIMENSIONS FOR ADRL VALVES [mm]

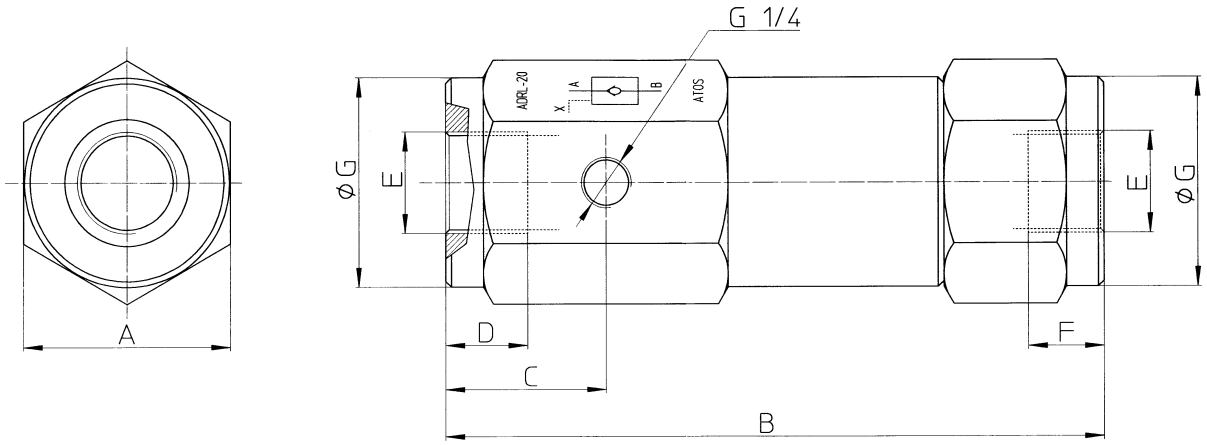

Model	A	B	C	D	E	F	ØG	Mass [Kg]
ADRL-10	41	120	30	14	G 3/8”	12	40	1
ADRL-15	50	145	33	16	G 1/2”	16	49	2
ADRL-20	55	175	42,5	18,5	G 3/4”	19	54,5	2,5
ADRL-32	90	245	53	23,5	G 1 1/4”	25	87,5	7

7 DIMENSIONS FOR AGRL AND AGRLE VALVES [mm]

AGRL-10
AGRLE-10

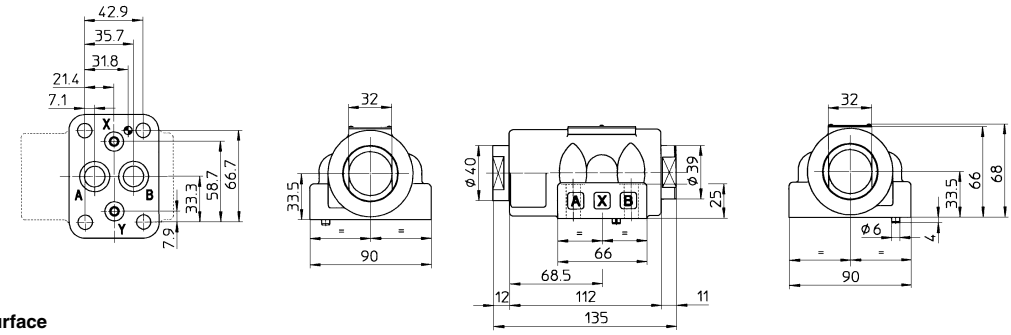

Mounting surface
ISO 5781-AG-06-2-A size 10
Fastening bolts: 4 socket head screws M10x45
Seals: 2 OR 3068; 2 OR 109
Ports A, B: Ø = 15 mm
Ports X, Y: Ø = 5 mm

Mass: 4 Kg

AGRL-20
AGRLE-20

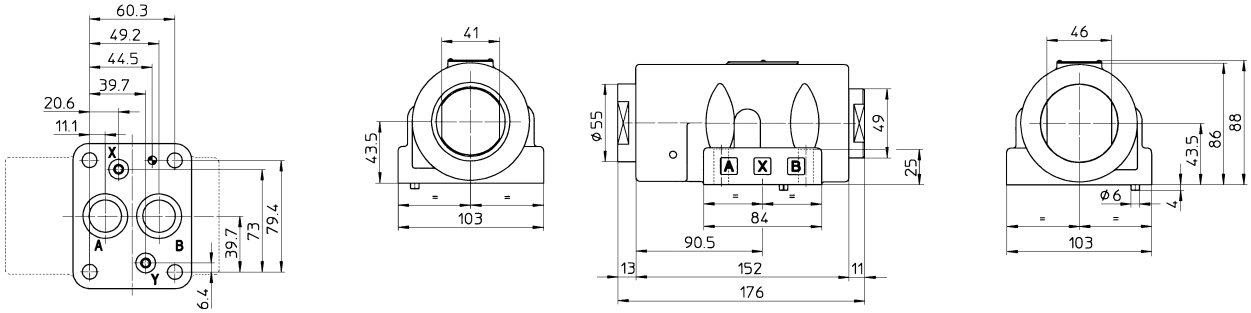

Mounting surface
ISO 5781-AH-08-2-A size 20
Fastening bolts: 4 socket head screws M10x45
Seals: 2 OR 4100; 2 OR 109
Ports A, B: Ø = 23 mm
Ports X, Y: Ø = 5 mm

Mass: 7 Kg

AGRL-32
AGRLE-32

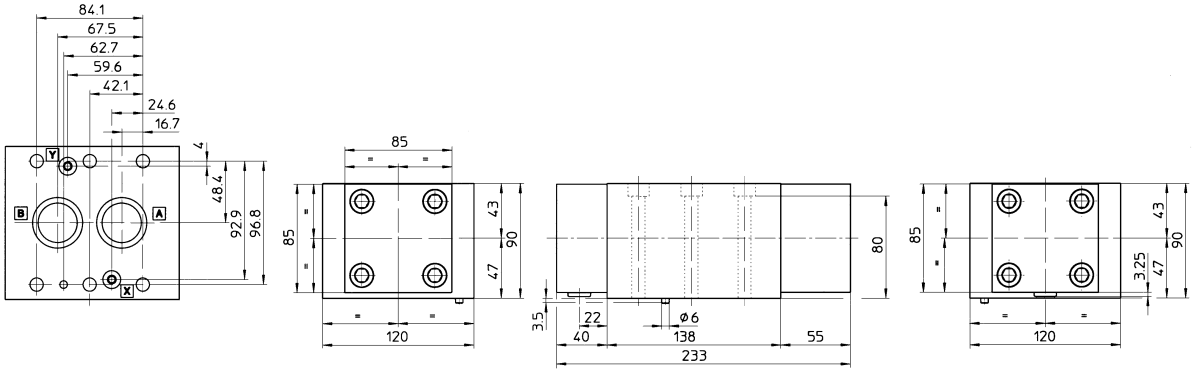

Mounting surface
ISO 5781-AJ-10-2-A size 32
Fastening bolts: 6 socket head screws M10x100
Seals: 2 OR 4131; 2 OR 109
Ports A, B: Ø = 30 mm
Ports X, Y: Ø = 5 mm

Mass: 14,8 Kg

8 MOUNTING SUBPLATES FOR AGRL AND AGRLE VALVES

Valve	Subplate model	Port location	GAS ports				Ø Counterbore [mm]				Mass [kg]
			A	B	X	Y	A	B	X	Y	
AGRL-10, AGRLE-10	BA-305	Ports A, B, X, Y underneath;	1/2”	1/2”	1/4”	1/4”	30	30	21,5	21,5	1
AGRL-20, AGRLE-20	BA-505		1”	1”	1/4”	1/4”	46	46	21,5	21,5	2
AGRL-32, AGRLE-32	BA-705 A		1 1/2”	1 1/2”	1/4”	1/4”	63,5	63,5	21,5	21,5	7,5

The subplates are supplied with fastening bolts. For further details see table K280.